linear modules

"Control in motion"

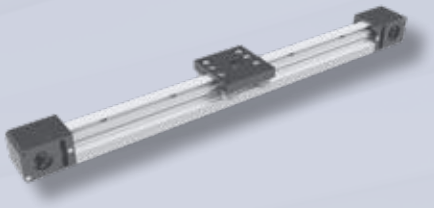

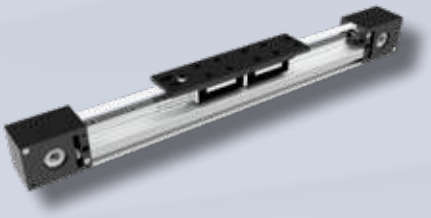

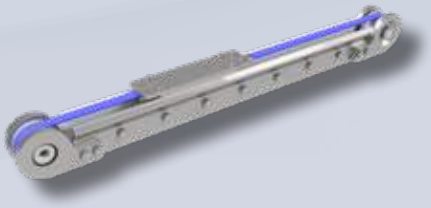

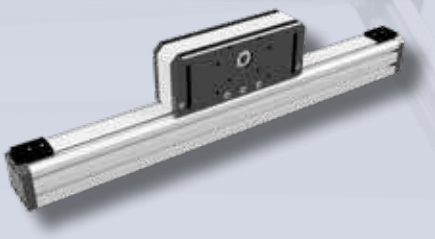

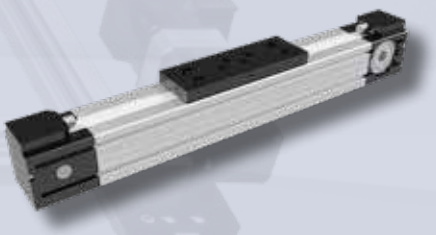

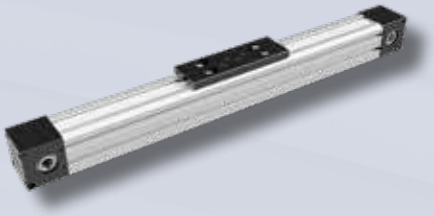

ALMOTION®

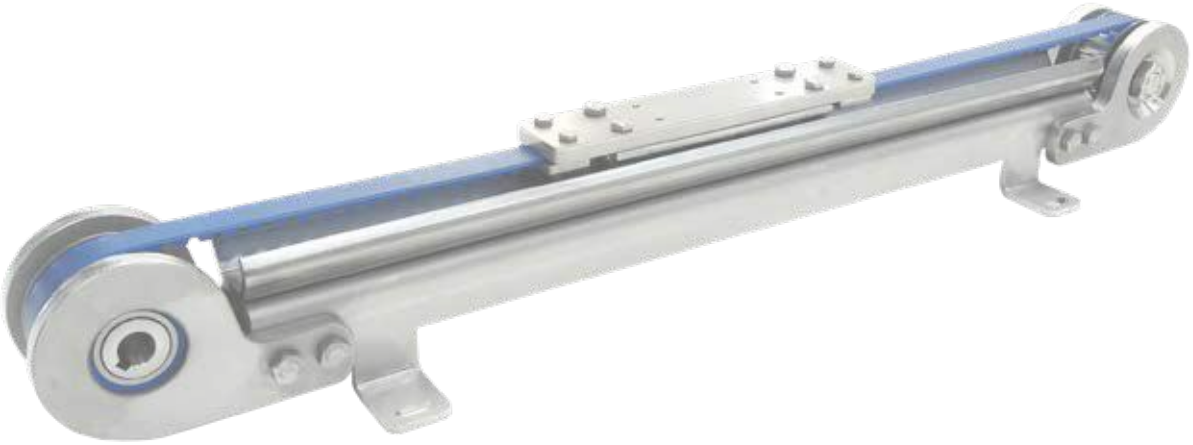

LTi45 SERIES

Robust linear units with wheel- or rail guide in stainless steel

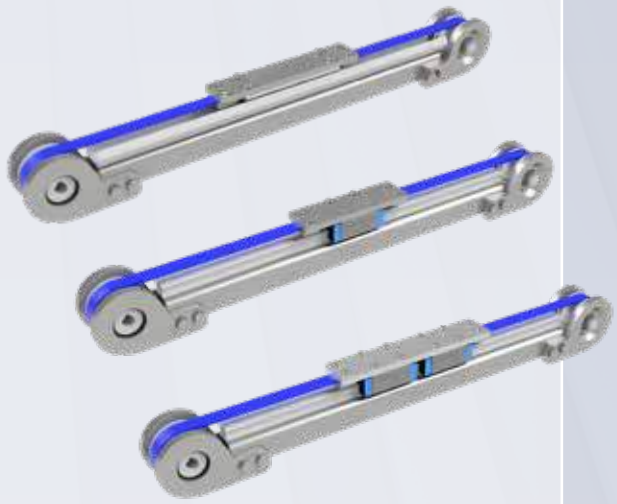

- Open design, the width of the profile is 45 mm
- Guide system of hardened wheels or recirculating rail guide, size -20-
- Toothed belt type AT10, 16 mm wide, in FDA blue version
- Double carriage design for high load
- C45 guide wheel system is very resistant to pollution
- Recirculating ball rail guide for heavy loads
- All components in inox mate

TECHNICAL DATA		LTI45-TRB-C45	LTI45-TRB-S20I
Maximum stroke*	mm	5.500	3.000
Maximum speed	mm/s	1.500	1.500
Maximum acceleration	m/s^2	30	30
No load torque	Nm	0,2	0,6
Repeatability	mm	± 0,1	± 0,1
Movement per revolution	mm	200	200

* longer lengths on request

LTi45 SERIES

TECHNICAL DATA

LOAD CAPACITY		LTI45-TRB-C45	LTI45-TRB-S20I	LTI45-TRB-S20ID
Mx	Nm	80	140	680
My	Nm	120	280	560
Mz	Nm	8	140	680
Fx	N	2.100	2.100	2.100
Fy	N	1.600	3.600	8.000
Fz	N	860	3.600	8.000

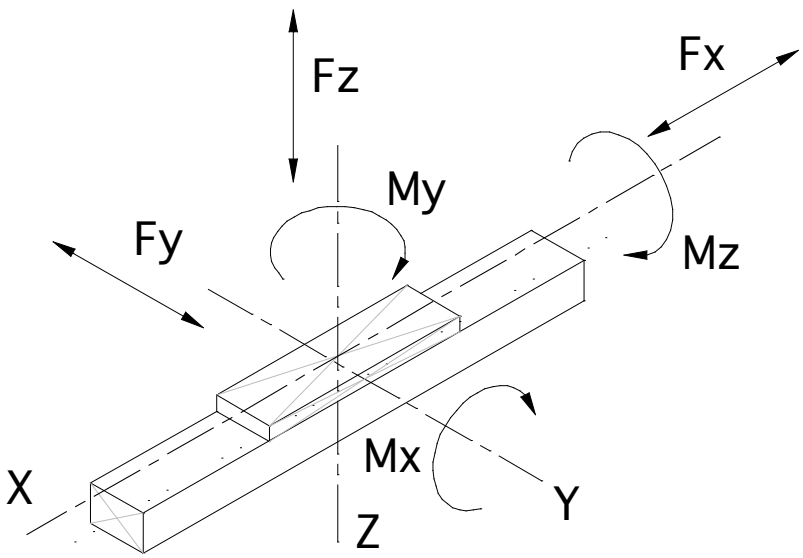

WEIGHTS (KG)

	LTI45-TRB-C45	LTI45-TRB-S20I	LTI45-TRB-S20ID
Unit weight 0 mm stroke	5,00	5,10	5,60
Weight per 100 mm stroke	0,40	0,45	0,45
Mass of carriage	0,70	0,90	1,10

LTi45 SERIES

DIMENSIONS

DIMENSIONS LTI45-TRB-C45

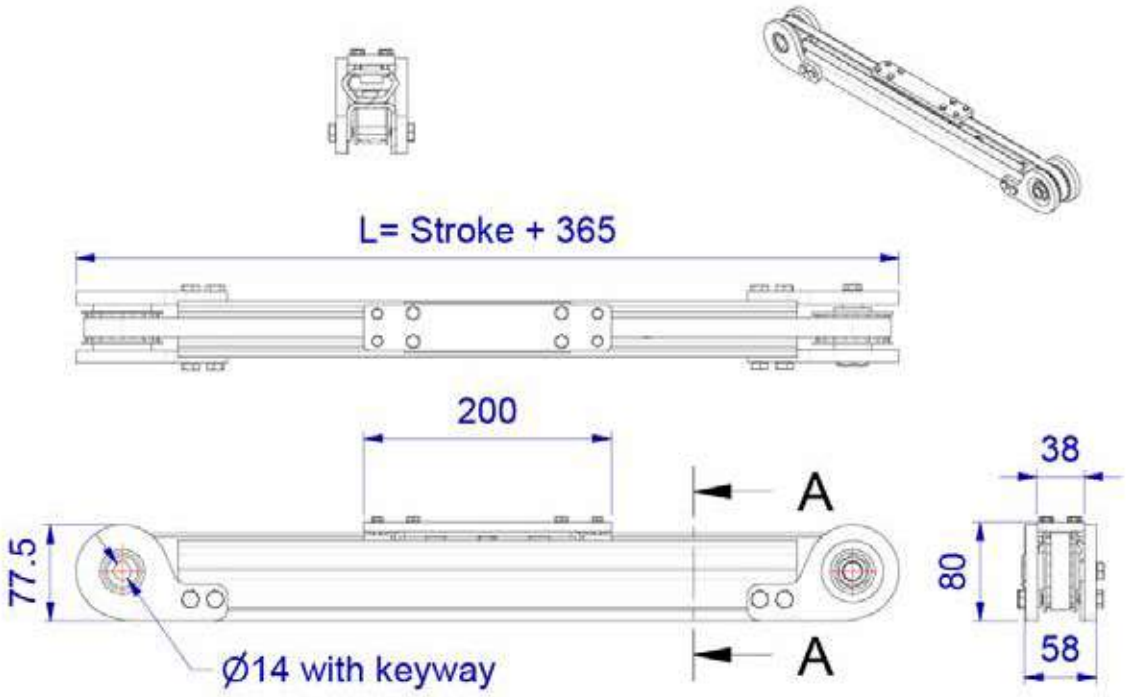

DIMENSIONS LTI45-TRB-S20I / S20I-D

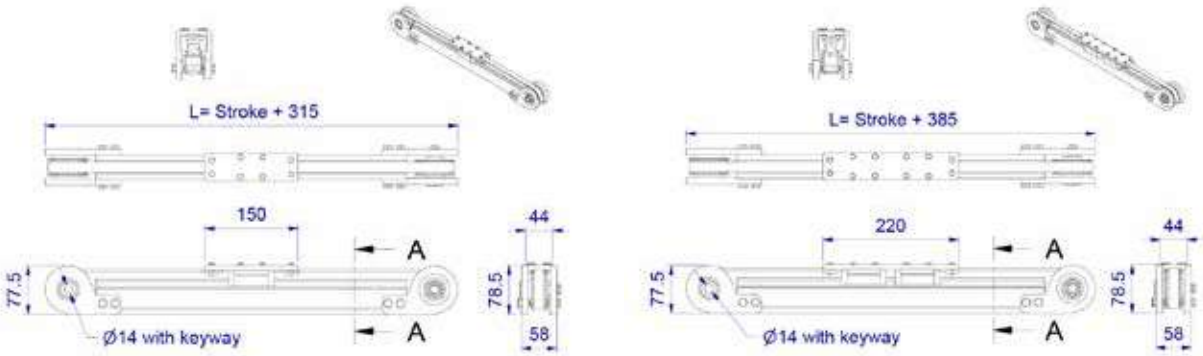

LTi60 SERIES

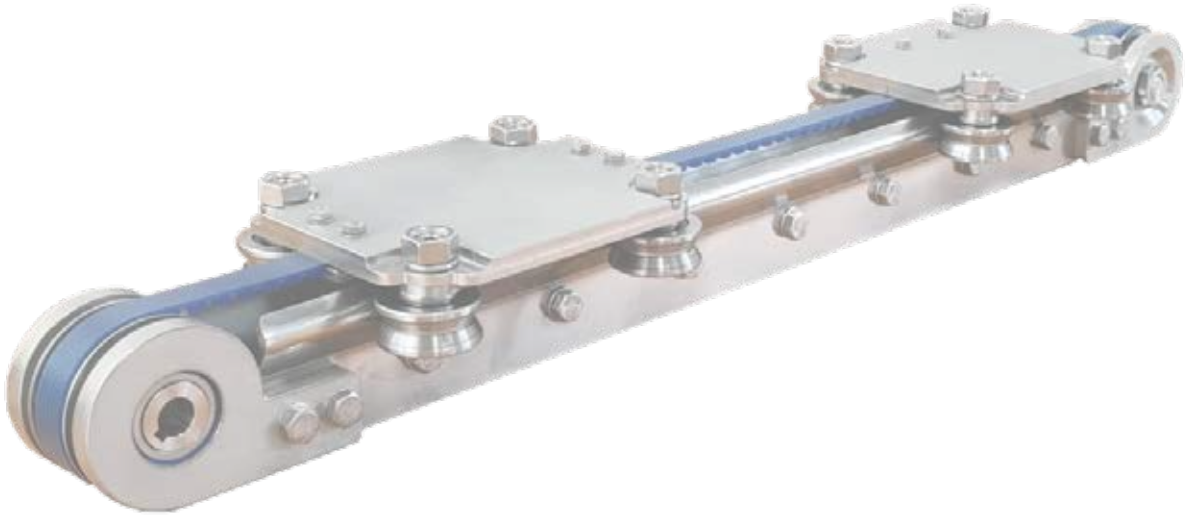

All drawings can be downloaded from www.almotion.nl

LTi60 SERIES

Robust linear units with wheel guide in stainless steel Hygienic design

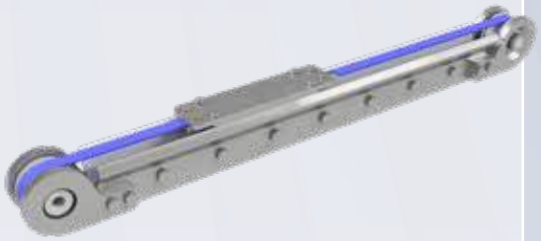

- Open design, the width of the profile is 55 mm
- Guide system of hardened wheels
- Toothed belt type AT10, in FDA blue version
- Easy to clean
- C45 guide wheel system is very resistant to pollution
- All components in inox mate

TECHNICAL DATA		LTI60-TRB-C45
Maximum stroke*	mm	2.300
Maximum speed	mm/s	1.500
Maximum acceleration	m/s^2	30
No load torque	Nm	0,2
Repeatability	mm	± 0,1
Movement per revolution	mm	200

* longer lengths on request

LTi60 SERIES

TECHNICAL DATA

LOAD CAPACITY		LTI60-TRB-C45
Mx	Nm	80
My	Nm	120
Mz	Nm	8
Fx	N	2.100
Fy	N	1.600
Fz	N	860

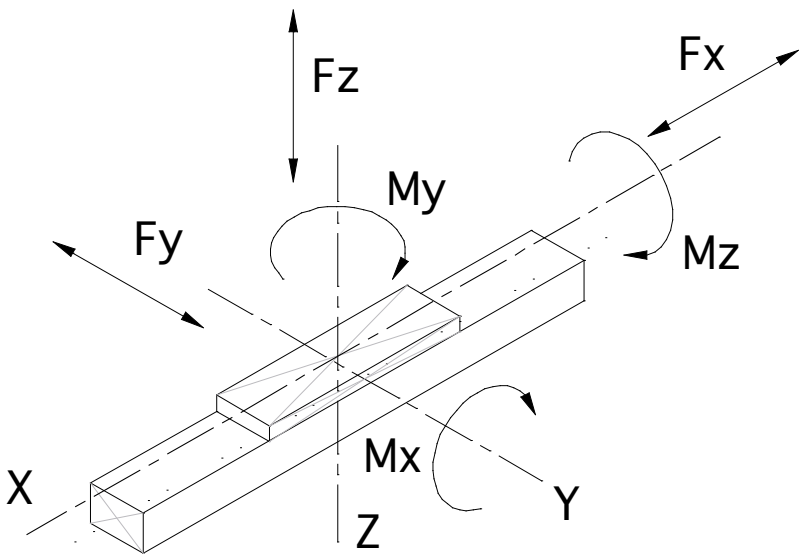

WEIGHTS (KG)

	LTi60-TRB-C45
Unit weight 0 mm stroke	5,00
Weight per 100 mm stroke	0,40
Mass of carriage	0,70

LTi60 SERIES

DIMENSIONS

DIMENSIONS LTI60-TRB-C45

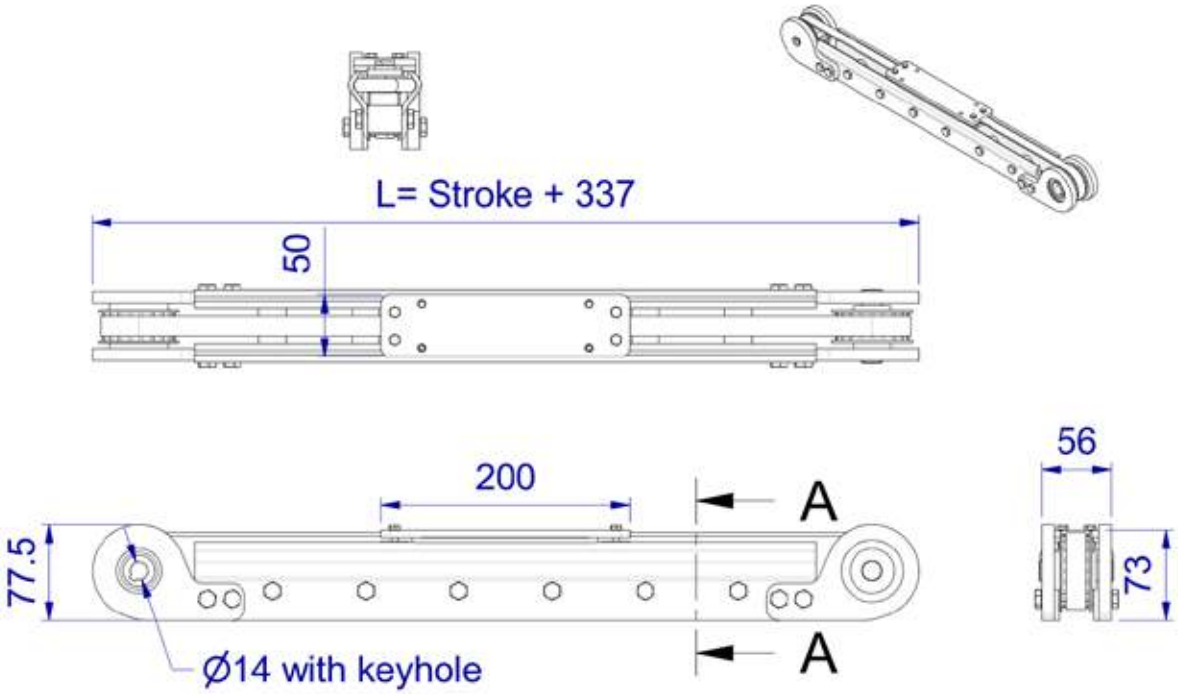

Worldwide support for linear units. Please contact us for your local technical assistant.

Almotion bv
Nijverheidsweg 14
6662 NG ELST (Gld)
The Netherlands
T : 0031 85 0491 777
E : info@almotion.nl
I : www.almotion.nl
I : www.linearmotion.nl
I : www.lineairegeleiding.nl

04-2023DRU

Errors and changes without notice.

ISO 16016:2000
Technical product documentation - Protection notices for restricting the use of documents and products.